Analog-1.1.27

INDHIRESH S-EE25BTECH11027

March 24, 2026

Question

Consider the op-amp circuit shown.

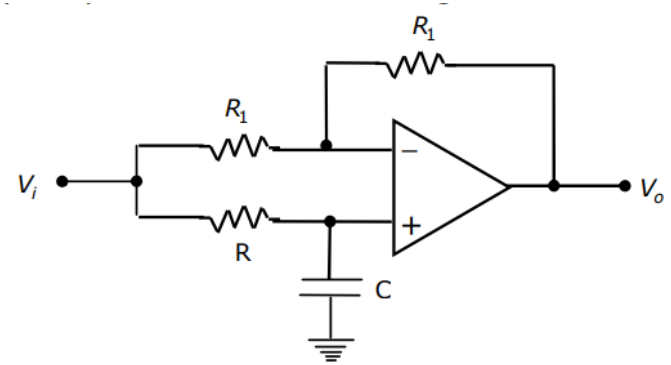

Figure: Op-amp circuit

1. The transfer function Vo(s)/Vi(s) is:

1) $\frac{1-sRC}{1+sRC}$ 2) $\frac{1+sRC}{1-sRC}$ 3) $\frac{1}{1-sRC}$ 4) $\frac{1}{1+sRC}$

2. If Vi = Vi sin(ωt) and Vo = Vo sin(ωt + ϕ), the minimum and maximum values of ϕ (in radians) are respectively:

1)-$\frac{\pi}{2}$ and $\frac{\pi}{2}$ 2)0 and $\frac{\pi}{2}$ 3) -π and 0 4)-$\frac{\pi}{2}$ and 0

PART-A: Ideal Assumptions

For an ideal operational amplifier analysis:

- **Infinite Input Impedance:** No current enters the terminals ($I_+ = I_- = 0$).
- **Infinite Open-Loop Gain:** Forces a **Virtual Short** between inputs:

$$V_+ = V_-$$

- **Zero Output Impedance:** The output can drive any load without voltage drop.

Analysis of the Non-Inverting Node (V_+)

The input $V_i(s)$ passes through a series RC network to ground. Using the **Voltage Divider Rule**:

$$V_+(s) = V_i(s) \cdot \frac{\frac{1}{sC}}{R + \frac{1}{sC}} \tag{1}$$

Multiply numerator and denominator by sC:

$$V_+(s) = \frac{1}{1 + sRC} V_i(s) \tag{2}$$

Analysis of the Inverting Node (V_-)

Applying KCL at the inverting node (assuming equal feedback resistors R):

$$\frac{V_i(s) - V_-(s)}{R_1} = \frac{V_-(s) - V_o(s)}{R_1} \tag{3}$$

The resistances R cancel out:

$$V_i(s) - V_-(s) = V_-(s) - V_o(s)$$

Solving for the output voltage $V_o(s)$:

$$V_o(s) = 2V_-(s) - V_i(s) \tag{4}$$

Substitution and Logic

Apply the **Virtual Short** condition ($V_- = V_+$):

Substitute Equation (2) into Equation (4):

$$V_o(s) = 2\left[\frac{1}{1+sRC}V_i(s)\right] - V_i(s) \tag{5}$$

Factor out the common term $V_i(s)$:

$$V_o(s) = V_i(s)\left[\frac{2}{1+sRC} - 1\right] \tag{6}$$

Final Result

Solve for the Transfer Function $H(s) = \frac{V_o(s)}{V_i(s)}$:

$$H(s) = \frac{2 - (1 + sRC)}{1 + sRC}$$

Transfer Function of the All-Pass Filter

$$H(s) = \frac{1 - sRC}{1 + sRC} \tag{7}$$

Therefore the correct option is (1).
The magnitude $|H(j\omega)|$ is 1 for all frequencies, providing a frequency-dependent phase shift without attenuation.

PART-B:The Setup: Defining V_{in} and V_o

In any circuit problem, we define V_{in} and V_o to map the mathematical model to physical reality:

- $V_{in}(t)$**:** The stimulus or input signal (e.g., a sine wave).
- $V_o(t)$**:** The measured output response.
- $H(s)$**:** The "Black Box" operator that transforms the input into the output.

The Relationship

$$V_o(s) = H(s) \cdot V_{in}(s)$$

Deriving the Transfer Function

Using nodal analysis and ideal op-amp assumptions ($V_+ = V_-$):

$$H(s) = \frac{V_o(s)}{V_{in}(s)} = \frac{1 - sRC}{1 + sRC} \tag{8}$$

Magnitude Calculation ($s = j\omega$):

$$|H(j\omega)| = \frac{\sqrt{1^2 + (-\omega RC)^2}}{\sqrt{1^2 + (\omega RC)^2}} = 1$$

Physical Meaning: V_o and V_{in} always have the same peak amplitude.

Calculation for the Phase Angle ϕ

The phase of a complex fraction is the phase of the numerator minus the phase of the denominator:

$$\phi(\omega) = \angle(1 - j\omega RC) - \angle(1 + j\omega RC)$$

Using the identity $\angle(a + jb) = \arctan\left(\frac{b}{a}\right)$:

1. **Numerator Phase:** $\arctan\left(\frac{-\omega RC}{1}\right) = -\arctan(\omega RC)$
2. **Denominator Phase:** $\arctan\left(\frac{\omega RC}{1}\right) = \arctan(\omega RC)$

Resulting Phase Formula

$$\phi(\omega) = [-\arctan(\omega RC)] - [\arctan(\omega RC)] = -2\arctan(\omega RC)$$

Part B: Phase Limits and Behavior

The phase ϕ is the angular shift between V_{in} and V_o as frequency varies:

Phase Limits:

- **At DC ($\omega \to 0$):** $\phi = -2\arctan(0) = 0^\circ$
- **At Corner Frequency ($\omega = 1/RC$):** $\phi = -2\arctan(1) = -90^\circ$
- **High Frequency ($\omega \to \infty$):** $\phi = -2\arctan(\infty) = -180^\circ$

This confirms the circuit provides a 180-degree range of delay.

Relating $H(j\omega)$ to Time-Domain Voltages

If the input is $V_{in}(t) = A\sin(\omega t)$, our solution predicts the output $V_o(t)$ will be:

The Output Equation

$$V_o(t) = A\sin(\omega t + \phi)$$

So the minimum and maximum value of the ϕ(in radians) will be $-\pi$ and 0.
Therefore the correct option is (3).

Additional keypoints

- Basically this circuit is an all pass filter
- An All-Pass Filter (APF) is a unique type of signal processing circuit that passes all frequency components of an input signal to the output without changing their amplitude (volume), but it introduces a frequency-dependent phase shift.
- Here the frequency-dependent phase shift is :$\phi = -2\arctan(\omega RC)$

Python Code for Plot

```
import numpy as np
import matplotlib.pyplot as plt

# Component values (Setting f_corner to 1kHz)
R = 10000
C = 15.915e-9
RC = R * C

# Frequency range (1 Hz to 1 MHz)
f = np.logspace(0, 6, 1000)
w = 2 * np.pi * f
s = 1j * w

# Ideal All-Pass Transfer Function H(s) = (1 -
    sRC) / (1 + sRC)
H_s = (1 - s * RC) / (1 + s * RC)
```

Python Code for Plot

```
# Magnitude and Phase
mag_db = 20 * np.log10(np.abs(H_s))
phase_deg = np.angle(H_s, deg=True)

# Create the Bode Plot
fig, (ax1, ax2) = plt.subplots(2, 1, figsize=(10,
    8), sharex=True)

# Magnitude Plot
ax1.semilogx(f, mag_db, color='blue', linewidth
    =2)
ax1.set_ylabel('Magnitude (dB)')
ax1.set_title('Bode Plot: Ideal All-Pass Filter
    Transfer Function')
```

Python Code for Plot

```
ax1.set_ylim(-1, 1) # Keep it narrow to show it's
    flat
ax1.grid(True, which="both", ls="-", alpha=0.5)

# Phase Plot
ax2.semilogx(f, phase_deg, color='red', linewidth
   =2)
ax2.set_ylabel('Phase (degrees)')
ax2.set_xlabel('Frequency (Hz)')
ax2.set_yticks([0, -45, -90, -135, -180])
ax2.grid(True, which="both", ls="-", alpha=0.5)

plt.tight_layout()
plt.show()
```

Plot

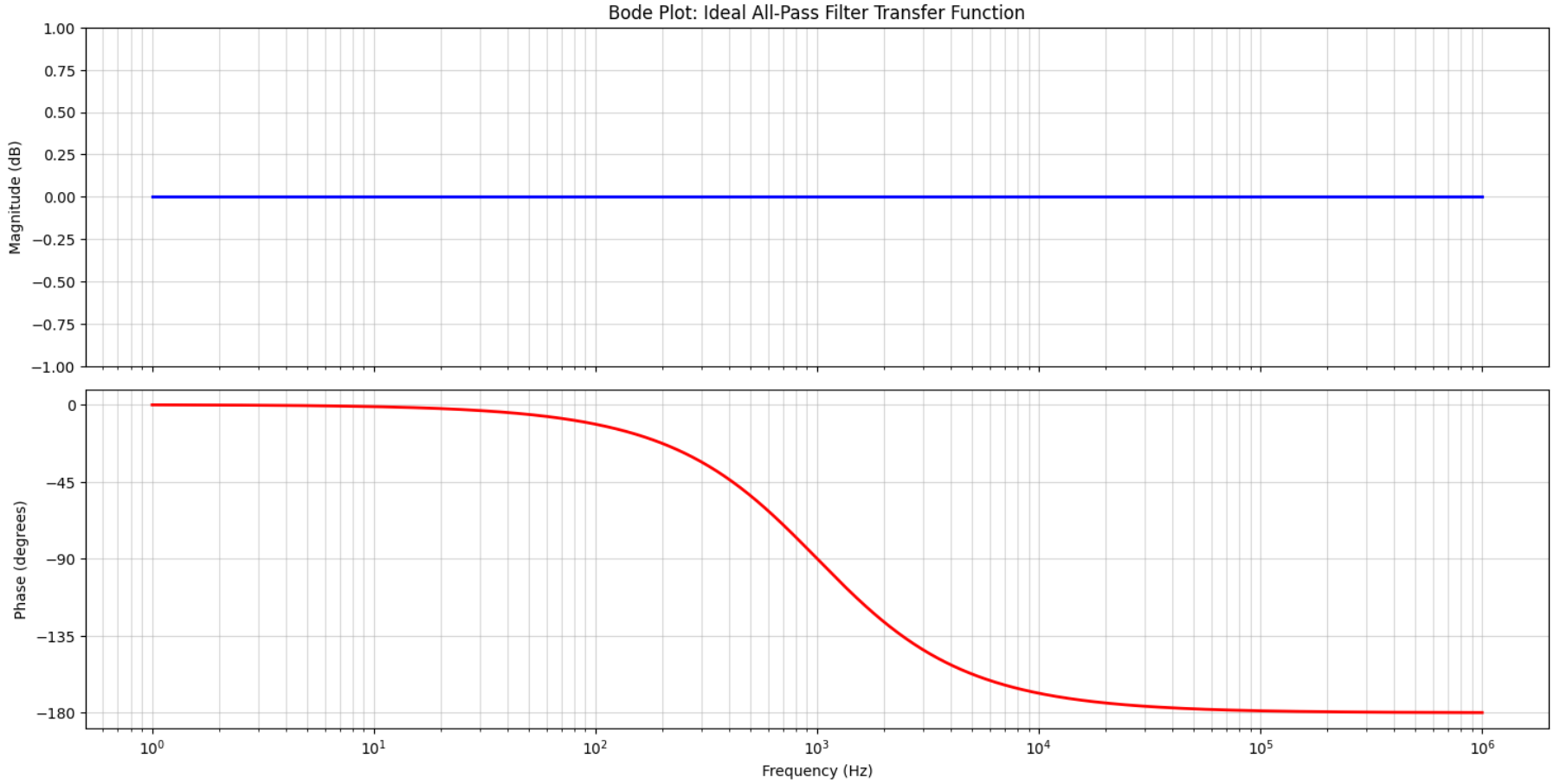

Figure: Python plot